- [illegible]
- [illegible]
- [illegible]
- [illegible]
- [illegible]
- [illegible]

- [illegible]
- [illegible]
- [illegible]
- [illegible]
- [illegible]

- [illegible]
- [illegible]

- [illegible]
- [illegible]
- [illegible]

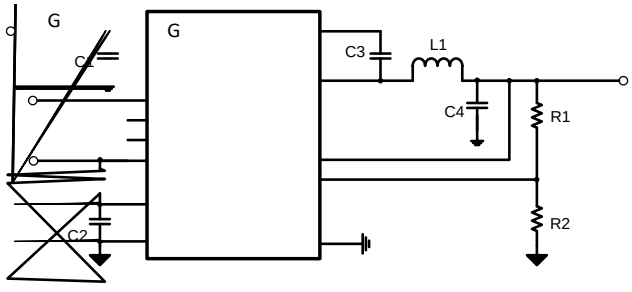

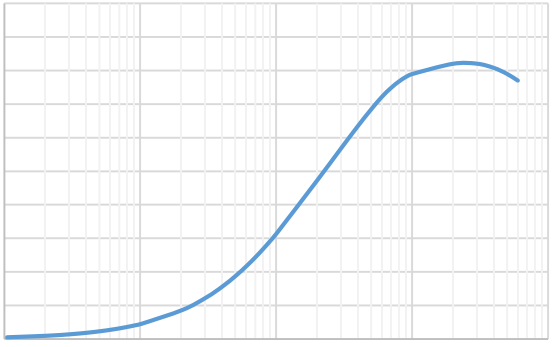

out

		Connect the pin to VCC to force the device in forced Pulse Width Modulation (PWM) operation mode.
		- - - -
		-
		-

-

		-		

	-			

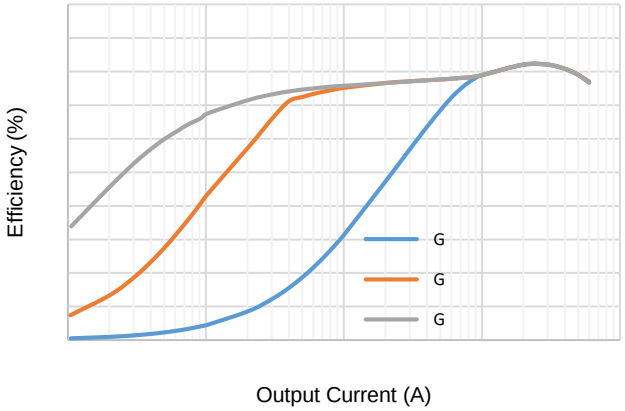
Efficiency (%)
G
G
G
Output Current (A)

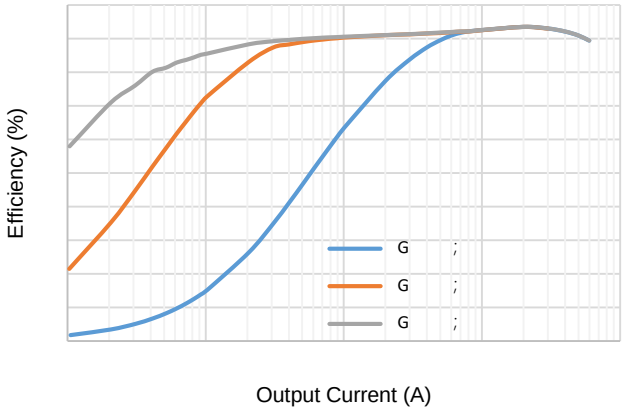
Efficiency (%)
G
G
G
Output Current (A)

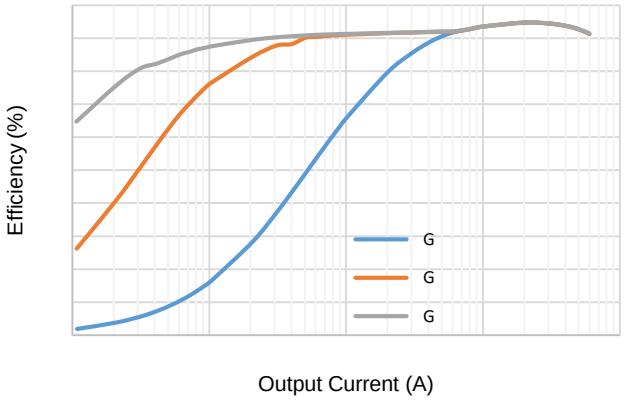
Efficiency (%)
G
G
G
Output Current (A)

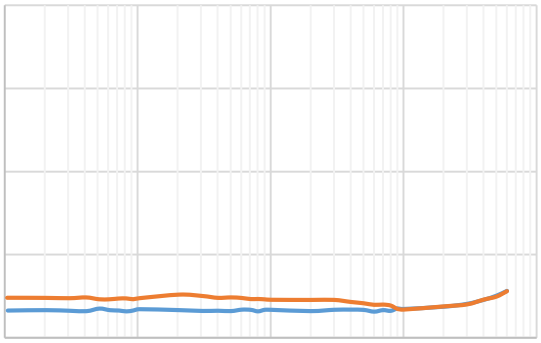

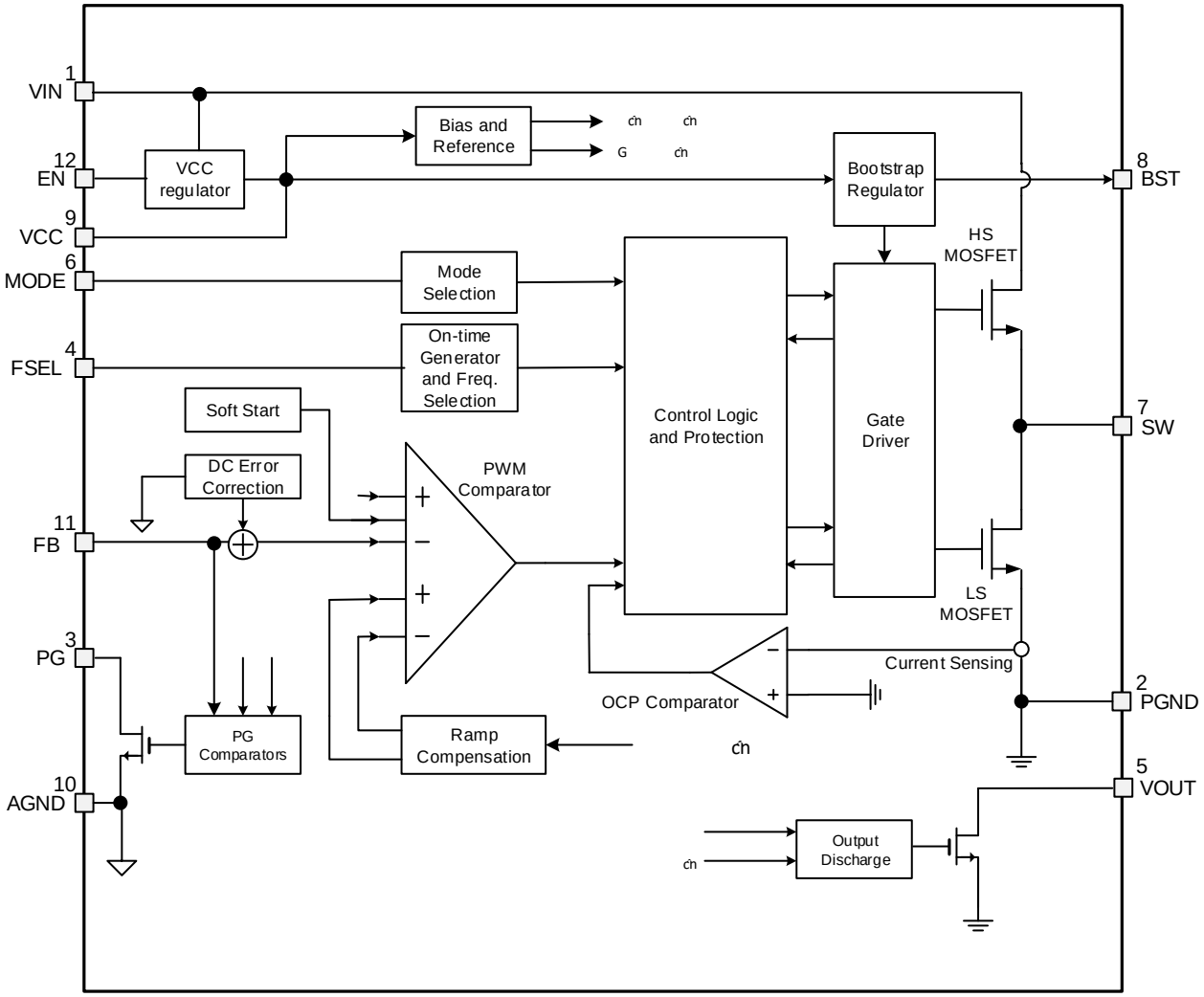
VIN
1
EN
12
VCC
9
MODE
6
FSEL
4
FB
11
PG
3
AGND
10
VCC regulator
Bias and Reference
Bootstrap Regulator
BST
8
HS MOSFET
Mode Selection
On-time Generator and Freq. Selection
Soft Start
DC Error Correction
PWM Comparator
Control Logic and Protection
Gate Driver
SW
7
LS MOSFET
Current Sensing
OCP Comparator
PGND
2
PG Comparators
Ramp Compensation
VOUT
5
Output Discharge

-

-

-

-			

-

-			

-

-

-

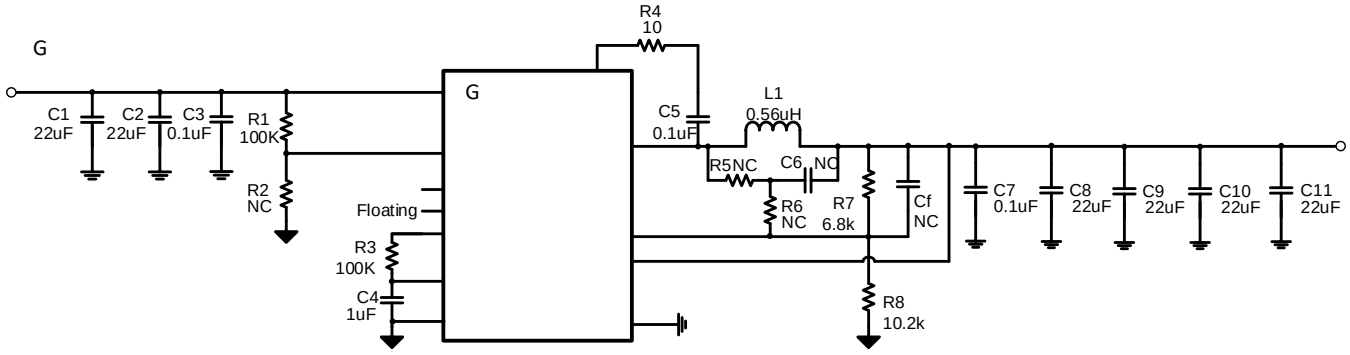
G
C1
22uF
C2
22uF
C3
0.1uF
R1
100K
R2
NC
G
Floating
R3
100K
C4
1uF
R4
10
C5
0.1uF
L1
0.56uH
R5NC
C6 NC
R6
NC
R7
6.8k
Cf
NC
R8
10.2k
C7
0.1uF
C8
22uF
C9
22uF
C10
22uF
C11
22uF

-

-

-

-

-

-

-

-
-
-
-
-
-

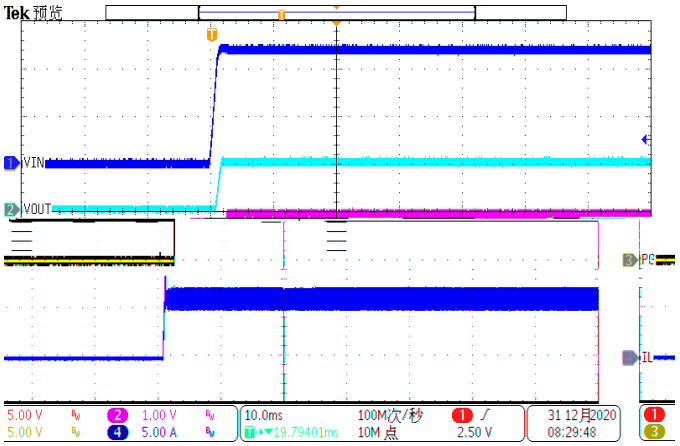
Tek 预览
VIN
VOUT
PG
IL
5.00 V
1.00 V
5.00 V
5.00 A
10.0ms
100M次/秒
19.79401ms
10M 点
2.50 V
31 12月2020
08:29:48

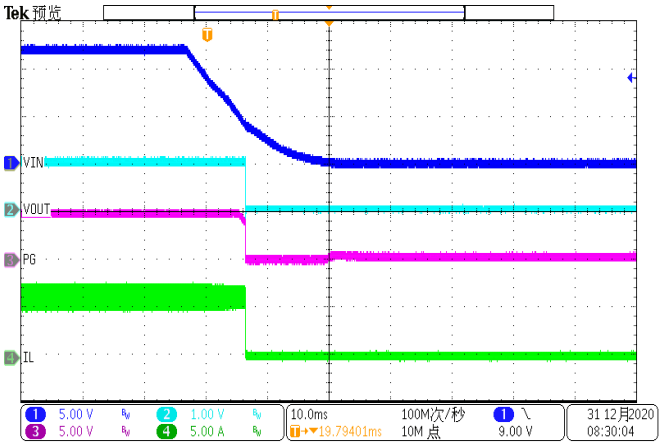
Tek 预览
VIN
VOUT
PG
IL
5.00 V
1.00 V
5.00 V
5.00 A
10.0ms
100M次/秒
19.79401ms
10M 点
9.00 V
31 12月2020
08:30:04

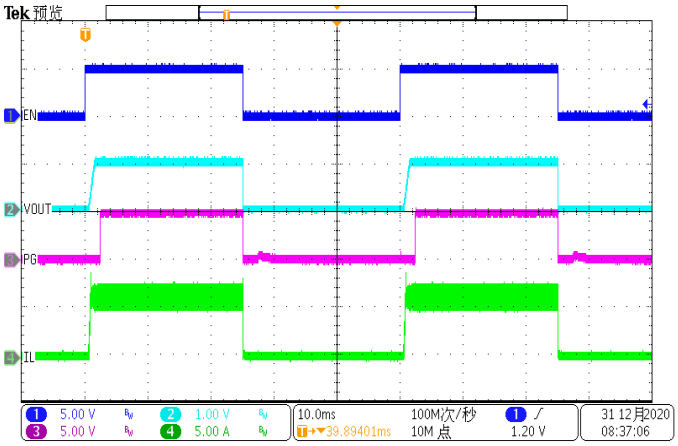
Tek 预览
EN
VOUT
PG
IL
5.00 V
1.00 V
5.00 V
5.00 A
10.0ms
100M次/秒
39.89401ms
10M 点
1.20 V
31 12月2020
08:37:06

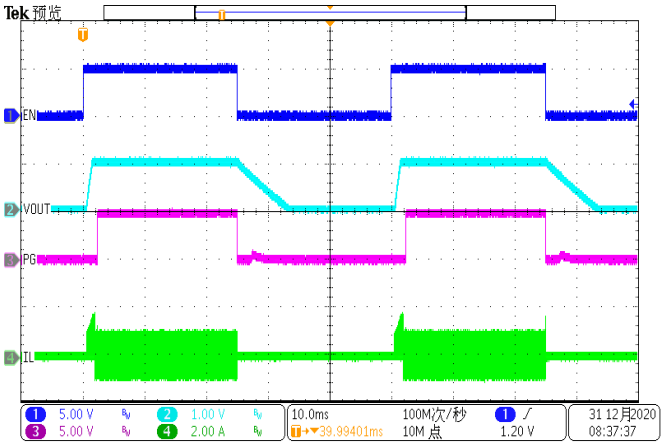
Tek 预览
EN
VOUT
PG
IL
5.00 V
1.00 V
5.00 V
2.00 A
10.0ms
100M次/秒
39.99401ms
10M 点
1.20 V
31 12月2020
08:37:37

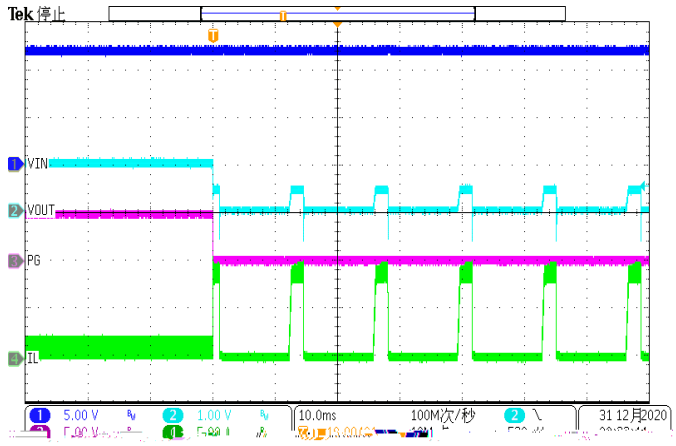
Tek 停止
VIN
VOUT
PG
IL
5.00 V
1.00 V
10.0ms
100M次/秒
31 12月2020

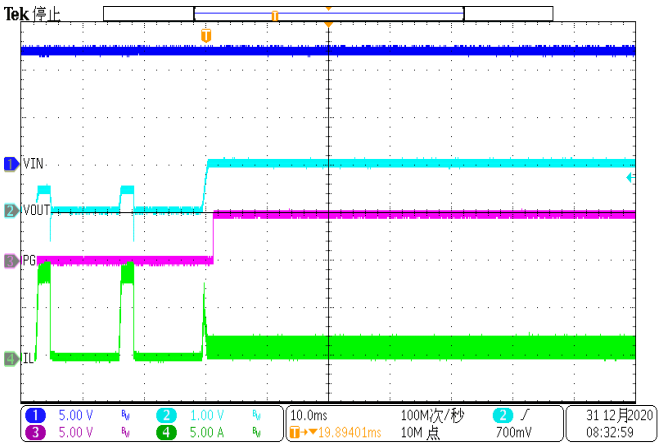
Tek 停止
VIN
VOUT
PG
IL
5.00 V
1.00 V
5.00 V
5.00 A
10.0ms
100M次/秒
19.89401ms
10M 点
700mV
31 12月2020
08:32:59

1.
2.
3.
4.
5.
6.