

NOTE: Page numbers for previous revisions may differ from page numbers in the current version.

Revision 1.0: Release to market

Revision 1.2: Update description

Revision 1.5: Upgrade Vin to 30V, add high low limit in EC table

!	!	
SCT9330STE	9330	8-Lead Plastic ESOP
1 For Tape & Reel, Add Suffix R (e.g. SCT9330STER).		

Over operating free-air temperature unless otherwise noted(1)

DESCRIPTION	MIN	MAX	UNIT
BST	-0.3	40	V
VIN, SW, EN	-0.3	34	V
BST-SW	-0.3	6	V
FB	-0.3	5.5	V
Operating junction temperature(2)	-40	125	C
Storage temperature T_{STG}	-65	150	C

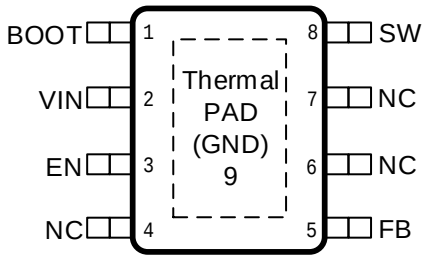

8-Lead Plastic E-SOP

(1) Stresses beyond those listed under Absolute Maximum Rating may cause device permanent damage. The device is not guaranteed to function outside of its Recommended Operation Conditions.

(2) The IC includes over temperature protection to protect the device during overload conditions. Junction temperature will exceed 150°C when over temperature protection is active. Continuous operation above the specified maximum operating junction temperature will reduce lifetime.

!	-	
BOOT	1	Power supply for the high-side power MOSFET gate driver. Must connect a 0.1uF or greater ceramic capacitor between BOOT pin and SW node.
VIN	2	Power supply input. Must be locally bypassed.
EN	3	Enable logic input. Floating the pin enables the device. This pin supports high voltage input up to VIN supply to be connected VIN directly to enable the device automatically. The device has precision enable thresholds 1.18V rising / 1.1V falling for programmable UVLO threshold and hysteresis.
FB	5	Buck converter output feedback sensing voltage. Connect a resistor divider from VOUT to FB to set up output voltage. The device regulates FB to the internal reference of 0.8V typical.
NC	4, 6,7	Not connected.

SW	8	Switching node of the buck converter.
Thermal Pad	9	GND and Heat dissipation path of die. Must be connected to ground plane on PCB for proper operation and optimized thermal performance.

Over operating free-air temperature range unless otherwise noted

!		!	!	
V_{IN}	Input voltage range	3.8	30	V
T_J	Operating junction temperature	-40	125	°C

!		!	!	
V_{ESD}	Human Body Model(HBM), per ANSI-JEDEC-JS-001-2014			

			!		!	
				85		mΩ
				58		mΩ
			0.792	0.8	0.808	V
			5.1	5.5	5.9	A
			4.4	5	5.6	A
			360	400	440	kHz
				80		ns
				±6		%
				4		ms
				110		%
				[redacted]		%
				512		Cycles
T_{HIC_R}	OCP hiccup restart time			8192		Cycles
T_{SD}	Thermal shutdown threshold	T_J rising		160		°C
	Hysteresis		[redacted]			

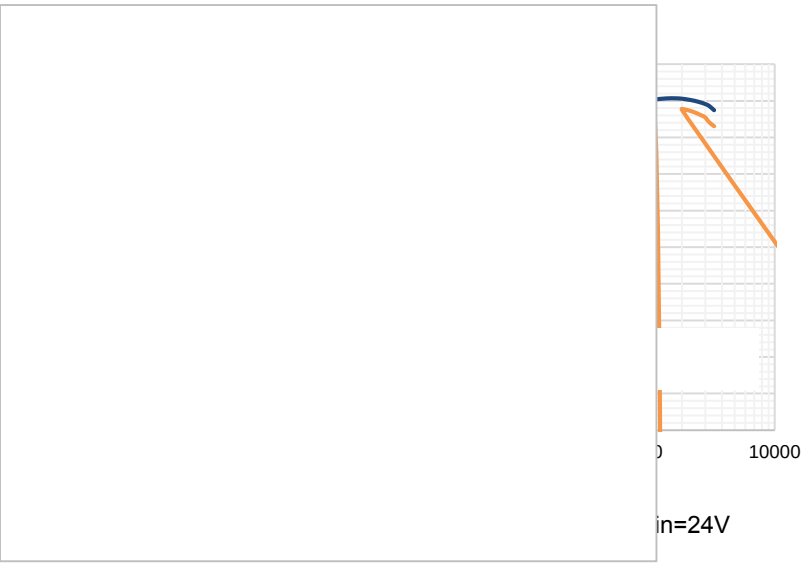

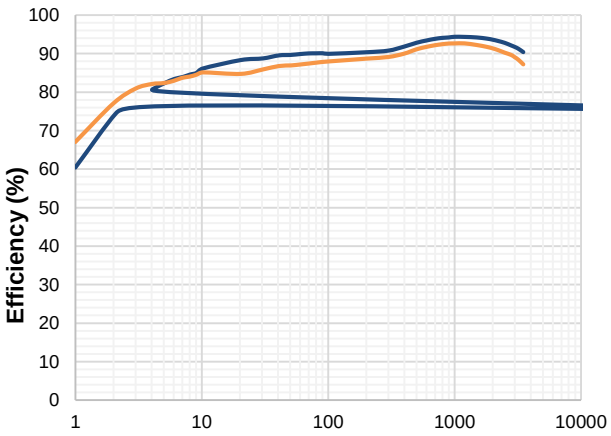

Figure 2. Efficiency vs Load Current, Vin=12V

Figure 3. Shut-down Current vs Temperature

Figure 4. Quiescent Current vs Temperature

Figure 5. Reference Voltage vs Temperature

Figure 6. Peak Current Limit vs Temperature

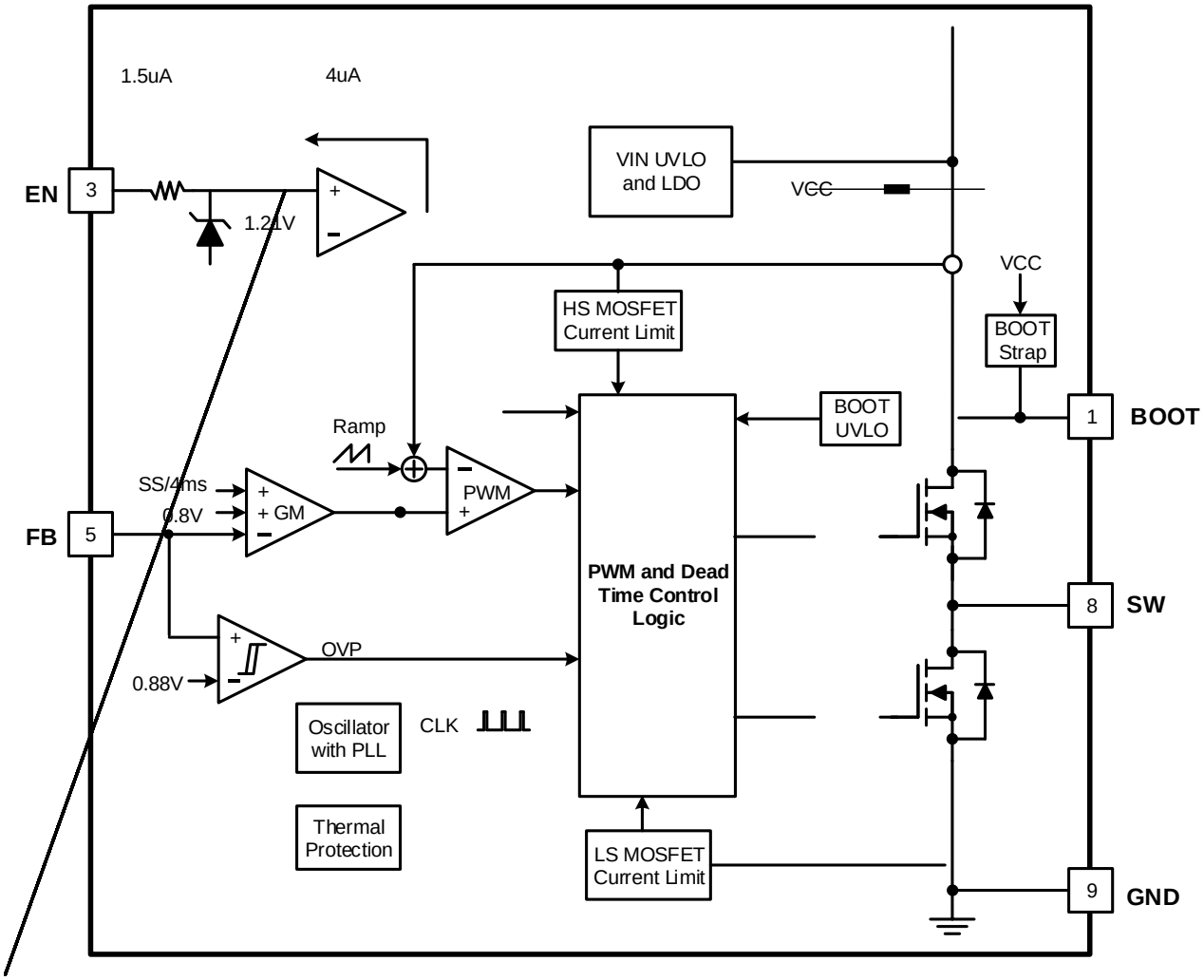

Figure 7. Functional Block Diagram

The SCT9330 device is 3.8V-30V input, 3A output, EMI friendly, fully integrated synchronous buck converters. The device employs fixed frequency peak current mode control. An internal clock with 400kHz frequency initiates turning on the integrated high-side power MOSFET Q1 in each cycle, then inductor current rises linearly and the converter charges output cap. When sensed voltage on high-side MOSFET peak current rising above the voltage of internal COMP (see functional block diagram), the device turns off high-side MOSFET Q1 and turns on low-side MOSFET Q2. The inductor current decreases when MOSFET Q2 is ON. In the next rising edge of clock cycle, the low-side MOSFET Q2 turns off. This repeats on cycle-by-cycle based.

The peak current mode control with the internal loop compensation network and the built-in 4ms soft-start simplify the SCT9330 footprints and minimize the off-chip component counts.

The error amplifier serves the COMP node by comparing the voltage on the FB pin with an internal 0.8V reference voltage. When the load current increases, a reduction in the feedback voltage relative to the reference raises COMP voltage till the average inductor current matches the increased load current. This feedback loop well regulates the output voltage. The device also integrates an internal slope compensation circuitry to prevent sub-harmonic oscillation when duty cycle is greater than 50% for a fixed frequency peak current mode control.

The quiescent current of SCT9330 is 20uA typical under no-load condition and no switching. When disabling the device, the supply shut down current is only 1μA. The SCT9330 works at Pulse Skipping Mode PSM to further increase the power efficiency in light load condition, hence the power efficiency can be achieved up to 88% at 5mA load condition.

The SCT9330 implements the Frequency Spread Spectrum FSS modulation spreading of ±6% centered 400kHz switching frequency. FSS improves EMI performance by not allowing emitted energy to stay in any one receiver band for a significant length of time. The converter has optimized gate driver scheme to achieve switching node voltage ringing-free without sacrificing the MOSFET switching time to further damping high frequency radiation EMI noise.

The hiccup mode minimizes power dissipation during prolonged output overcurrent or short conditions. The hiccup wait time is 512 cycles and the hiccup restart time is 8192 cycles. The SCT9330 device also features full protections including cycle-by-cycle high-side MOSFET peak current limit, over-voltage protection, and over-temperature protection.

The SCT9330 is designed to operate from an input voltage supply range between 3.8V to 30V, at least 0.1uF decoupling ceramic cap is recommended to bypass the supply noise. If the input supply locates more than a few inches from the converter, an additional electrolytic or tantalum bulk capacitor or with recommended 22uF may be required in addition to the local ceramic bypass capacitors.

The SCT9330 Under Voltage Lock Out (UVLO) default startup threshold is typical 3.5V with VIN rising and shutdown threshold is 3.1V with VIN falling. The more accurate UVLO threshold can be programmed through the precision enable threshold of EN pin.

When applying a voltage higher than the EN high threshold (typical 1.18V/rise), the SCT9330 enables all functions and the device starts soft-start phase. The SCT9330 has the built in 4ms soft-start time to prevent the output

overshoot and inrush current. When EN pin is pulled low, the internal SS net will be discharged to ground. Buck operation is disabled when EN voltage falls below its lower threshold (typically 1.1V/fall).

An internal 1.5uA pull up current source connected from internal LDO power rail to EN pin guarantees that floating EN pin automatically enables the device. For the application requiring higher VIN UVLO voltage than the default setup, there is a 4uA hysteresis pull up current source on EN pin which configures the VIN UVLO voltage with an off-chip resistor divider R3 and R4, shown in Figure 8. The resistor divider R3 and R4 are calculated by equation (1) and (2).

EN pin is a high voltage pin and can be directly connected to VIN to automatically start up the device with VIN rising to its internal UVLO threshold.

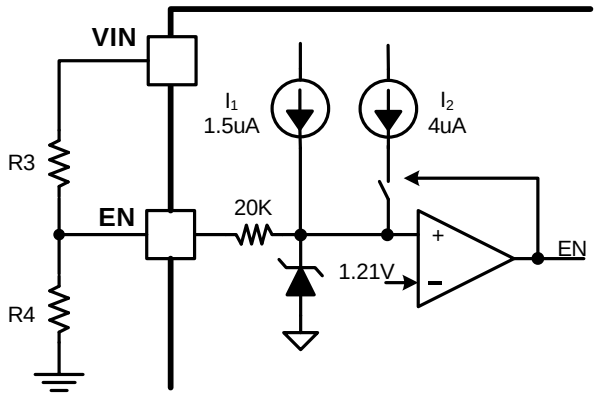

Figure 8. Adjustable VIN UVLO

(1)

(2)

Where:

Vstart: Vin rise threshold to enable the device
Vstop: Vin fall threshold to disable the device
I_1=1.5uA
I_2=4uA
V_{ENR}=1.18V
V_{EMF}=1.1V

! ,

In some applications, the system EMI test must meet EMI standards EN55011 and EN55022. To improve EMI performance, SCT9330 adopts Frequency Spread Spectrum (FSS) to spread the switching noise over a wider band and therefore reduces conducted and radiated interference peak amplitude at particular frequency. The SCT9330 features 400kHz switching frequency with spreading frequency of +/-6% and modulation rate 1/512 of switching frequency. The FSS technique effectively decreases the EMI noise by spreading the switching frequency from fixed 400kHz to a range 517kHz ~ 583kHz. As a result, the harmonic wave amplitude is reduced and the harmonic wave band is wider.

In buck converter, the switching node ringing amplitude and cycles are critical especially related to the high frequency radiation EMI noise. The SCT9330 implements the multi-level gate driver speed technique to achieve the switching node ringing-free without scarifying the switching node rise/fall slew rate and power efficiency of the converter. The switching node ringing amplitude and cycles are damped by the built-in MOSFETs gate driving technique (SCT Patented Proprietary Design).

!

The SCT9330 has cycle-by-cycle peak current limit with sensing the internal high side MOSFET Q1 current during overcurrent condition. While the Q1 turns on, its conduction current is monitored by the internal sensing circuitry. Once the high-side MOSFET Q1 current exceeds the limit, it turns off immediately. If the Q1 over current time exceeds 512 switching cycles (hiccup waiting time), the buck converter enters hiccup mode and shuts down. After 8192 cycles off, the buck converter restarts to power up. The hiccup modes reduce the power dissipation in over current condition.

! ,

Both SCT9330 features buck converter output over voltage protection (OVP). If the output feedback pin voltage exceeds110% of feedback reference voltage (0.8V), the converter stops switching immediately. When the output feedback pin voltage drops below 105% of feedback reference voltage, the converter resumes to switching. The OVP function prevents the connected output circuitry damaged from un-predictive overvoltage. Featured feedback overvoltage protection also prevents dynamic voltage spike to damage the circuitry at load during fast loading transient.

The high-side MOSFET Q1 has minimum on-time 80ns typical limitation. While the device operates at minimum on-time, further increasing VIN results in pushing output voltage beyond regulation point. With output feedback over voltage protection, the converter skips pulse by turning off high-side MOSFET Q1 and prevents output running away higher to damage the load.

! ! ,

In heavy load condition, the SCT9330 forces the device operating at forced Pulse Width Modulation (PWM) mode. When the load current decreasing, the internal COMP net voltage decreases as the inductor current down. With the load current further decreasing, the COMP net voltage decreases and be clamped at a voltage corresponding to the 600mA peak inductor current. When the load current approaches zero, the SCT9330 enter Pulse Skipping Mode (PSM) mode to increase the converter power efficiency at light load condition. When the inductor current decreases to zero, zero-cross detection circuitry on high-side MOSFET Q1 forces the Q1 off till the beginning of the next switching cycle. The buck converter does not sink current from the load when the output load is light and converter works in PSM mode.

,

An external bootstrap capacitor between BST and SW pin powers floating high-side power MOSFET gate driver. The bootstrap capacitor voltage is charged from an integrated voltage regulator when high-side power MOSFET is off and low-side power MOSFET is on.

The floating supply (BST to SW) UVLO threshold is 2.7V rising and hysteresis of 350mV. When the converter operates with high duty cycle or prolongs in sleep mode for certain long time, the required time interval to recharging bootstrap capacitor is too long to keep the voltage at bootstrap capacitor sufficient. When the voltage across bootstrap capacitor drops below 2.35V, BST UVLO occurs. The SCT9330 intervenes to turn on low side MOSFET periodically to refresh the voltage of bootstrap capacitor to guarantee operation over a wide duty range.

For good input voltage filtering, choose low-ESR ceramic capacitors. A ceramic capacitor 10μF is recommended for the decoupling capacitor anda0.1μF ceramic bypass capacitor is recommended to be placed as close as possible to the VIN pin of the SCT9330.

Use Equation (3) to calculate the input voltage ripple:

(3)

Where:

- C_{IN} is the input capacitor value
- f_{sw} is the converter switching frequency
- I_{OUT} is the maximum load current

Due to the inductor current ripple, the input voltage changes if there is parasitic inductance and resistance between the power supply and the VIN pin. It is recommended to have enough input capacitance to make the input voltage ripple less than 100mV. Generally, a 35V/10uF input ceramic capacitor is recommended for most of applications. Choose the right capacitor value carefully with considering high-capacitance ceramic capacitors DC bias effect, which has a strong influence on the final effective capacitance.

The performance of inductor affects the power supply's steady state operation, transient behavior, loop stability, and buck converter efficiency. The inductor value, DC resistance (DCR), and saturation current influences both efficiency and the magnitude of the output voltage ripple. Larger inductance value reduces inductor current ripple and therefore leads to lower output voltage ripple. For a fixed DCR, a larger value inductor yields higher efficiency via reduced RMS and core losses. However, a larger inductor within a given inductor family will generally have a greater series resistance, thereby counteracting this efficiency advantage.

Inductor values can have ±20% or even ±30% tolerance with no current bias. When the inductor current approaches saturation level, its inductance can decrease 20% to 35% from the value at 0-A current depending on how the inductor vendor defines saturation. When selecting an inductor, choose its rated current especially the saturation current larger than its peak current during the operation.

To calculate the current in the worst case, use the maximum input voltage, minimum output voltage, maxim load current and minimum switching frequency of the application, while considering the inductance with -30% tolerance and low-power conversion efficiency.

For a buck converter, calculate the inductor minimum value as shown in equation (4).

(4)

Where:

- K_{IND} is the coefficient of inductor ripple current relative to the maximum output current.

Therefore, the peak switching current of inductor, I_{LPEAK}, is calculated as in equation (5).

(5)

Set the current limit of the SCT9330 higher than the peak current I_{LPEAK} and select the inductor with the saturation current higher than the current limit. The inductor's DC resistance (DCR) and the core loss significantly affect the efficiency of power conversion. Core loss is related to the core material and different inductors have different core

loss. For a certain inductor, larger current ripple generates higher DCR and ESR conduction losses and higher core loss.

For buck converter, the output capacitor value determines the regulator pole, the output voltage ripple, and how the regulator responds to a large change in load current. The output capacitance needs to be selected based on the most stringent of these three criteria.

For small output voltage ripple, choose a low-ESR output capacitor like a ceramic capacitor, for example, X5R and X7R family. Typically, 1～3x 22μF ceramic output capacitors work for most applications. Higher capacitor values can be used to improve the load transient response. Due to a capacitor's de-rating under DC bias, the bias can

,

The SCT9330 has the internal integrated loop compensation as shown in the function block diagram. The compensation network includes a 18k resistor and a 7.6nF capacitor. Usually, the type II compensation network has a phase margin between 60 and 90 degree. However, if the output capacitor has ultra-low ESR, the converter results in low phase margin. To increase the converter phase margin, a feed-forward cap C_{ff} is used to boost the phase margin at the converter cross-over frequency f_c. Equation (10) is used to calculate the feed-forward capacitor.

(10)

, ,

The SCT9330 features external programmable output voltage by using a resistor divider network R1 and R2 as shown in the typical application circuit Figure 10. Use equation (11) to calculate the resistor divider values.

(11)

Set the resistor R2 value to be approximately 30k. Slightly increasing or decreasing R1 can result in closer output voltage matching when using standard value resistors.

,

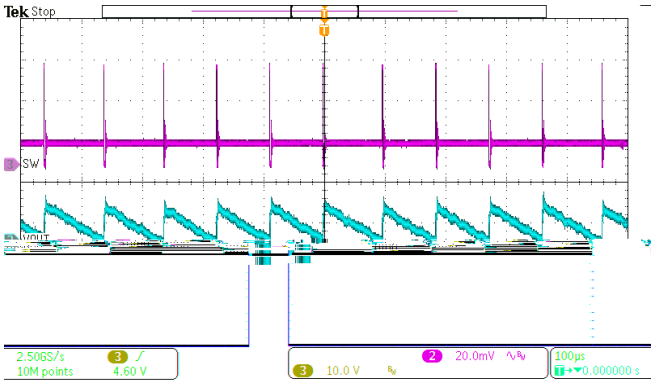

Figure 11.SW node waveform and Output Ripple
VIN=24V, IOUT=10mA

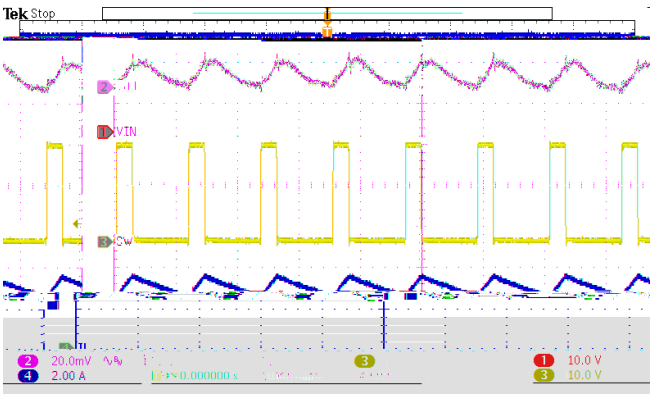

Figure 12.SW Node Waveform and Output Ripple
VIN=24V, IOUT=3A

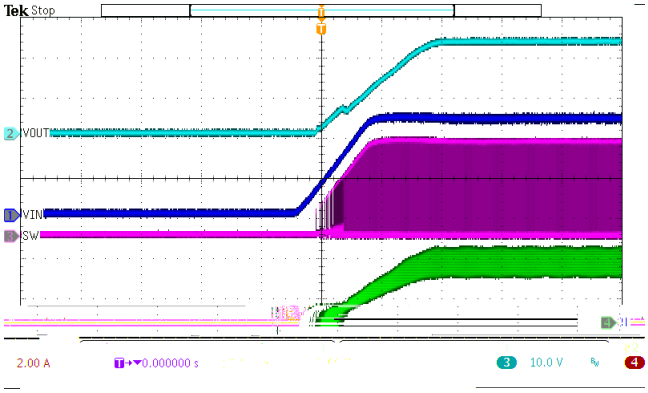

Figure 13. Power Up
VIN=24V, VOUT=5V, IOUT=3A

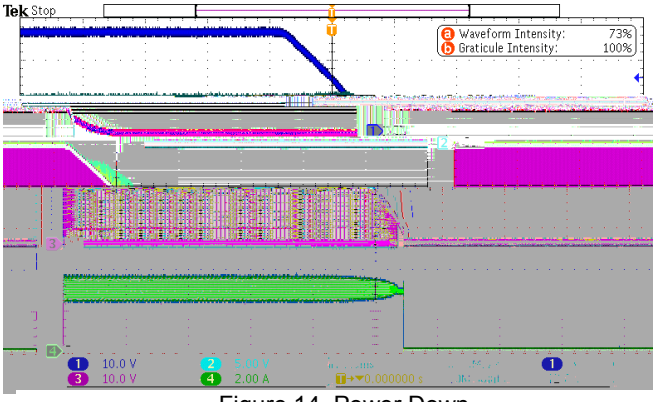

Figure 14. Power Down
VIN=24V, VOUT=5V, IOUT=3A

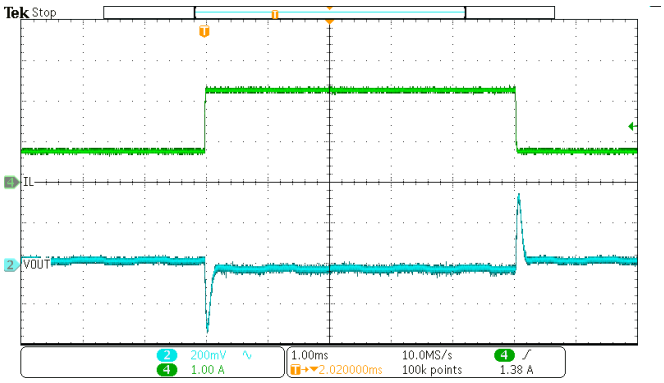

Figure 15 Load Transient
VOUT=5V, IOUT=0.75A to 2.25 A, SR=250mA/us

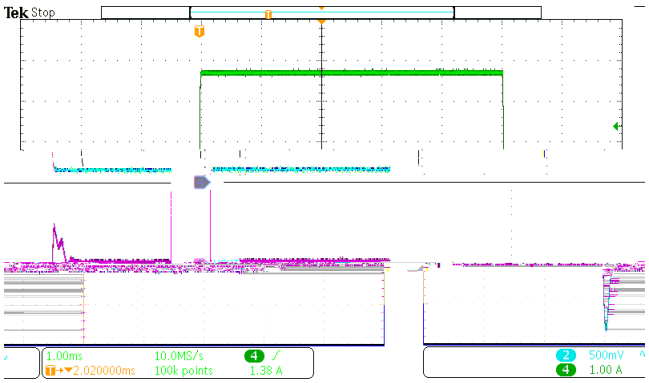

Figure 16. Load Transient
VOUT=5V, IOUT=0.3A to 2.7A, SR=250mA/us

The regulator could suffer from instability and noise problems without carefully layout of PCB. Radiation of high-frequency noise induces EMI, so proper layout of the high-frequency switching path is essential. Minimize the length and area of all traces connected to the SW pin, and always use a ground plane under the switching regulator to minimize coupling. The input capacitor needs to be very close to the VIN pin and GND pin to reduce the input supply ripple. Place the capacitor as close to VIN pin as possible to reduce high frequency ringing voltage on SW pin as well. Figure 17 is the recommended PCB layout of SCT9330.

The layout needs be done with well consideration of the thermal. A large top layer ground plate using multiple thermal vias is used to improve the thermal dissipation. The bottom layer is a large ground plane conneNrMSR e ns-

- $R_{\theta JA}$ is the junction-to-ambient thermal resistance given in the Thermal Information table.

The real junction-to-ambient thermal resistance $R_{\theta JA}$ of the package greatly depends on the PCB type, layout, thermal pad connection and environmental factor. Using thick PCB copper and soldering the GND to a large ground plate enhance the thermal performance. Using more vias connects the ground plate on the top layer and bottom layer around the IC without solder mask also enhance the thermal capability.

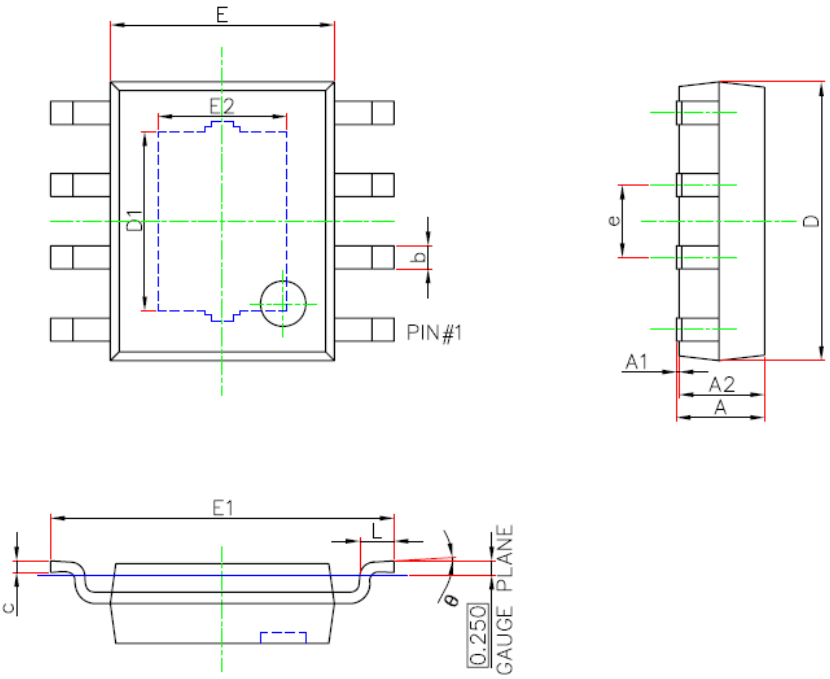

ESOP8/PP(95x130) Package Outline Dimensions

Symbol	Dimensions in Millimeters		Dimensions in Inches	
	Min.	Max.	Min.	Max.
A	1.300	1.700	0.051	0.067
A1	0.000	0.100	0.000	0.004
A2	1.350	1.550	0.053	0.061
b	0.330	0.510	0.013	0.020
c	0.170	0.250	0.007	0.010
D	4.700	5.100	0.185	0.201
D1	3.050	3.250	0.120	0.128
E	3.800	4.000	0.150	0.157
E1	5.800	6.200	0.228	0.244
E2	2.160	2.360	0.085	0.093
e	1.270(BSC)		0.050(BSC)	
L	0.400	1.270	0.016	0.050
θ	0°	8°	0°	8°

1. Drawing proposed to be made a JEDEC package outline MO-220 variation.
2. Drawing not to scale.
3. All linear dimensions are in millimeters.
4. Thermal pad shall be soldered on the board.
5. Dimensions of exposed pad on bottom of package do not include mold flash.
6. Contact PCB board fabrication for minimum solder mask web tolerances between the pins.

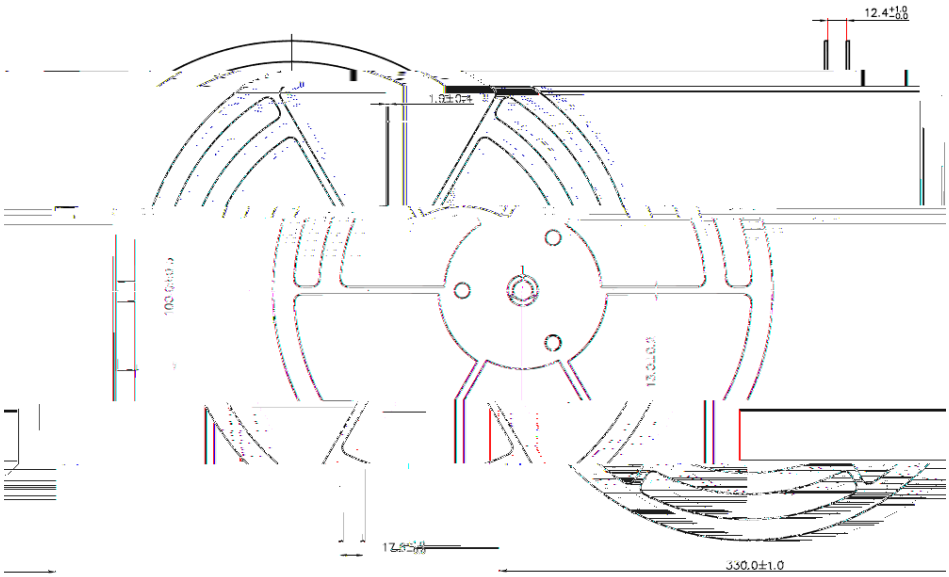

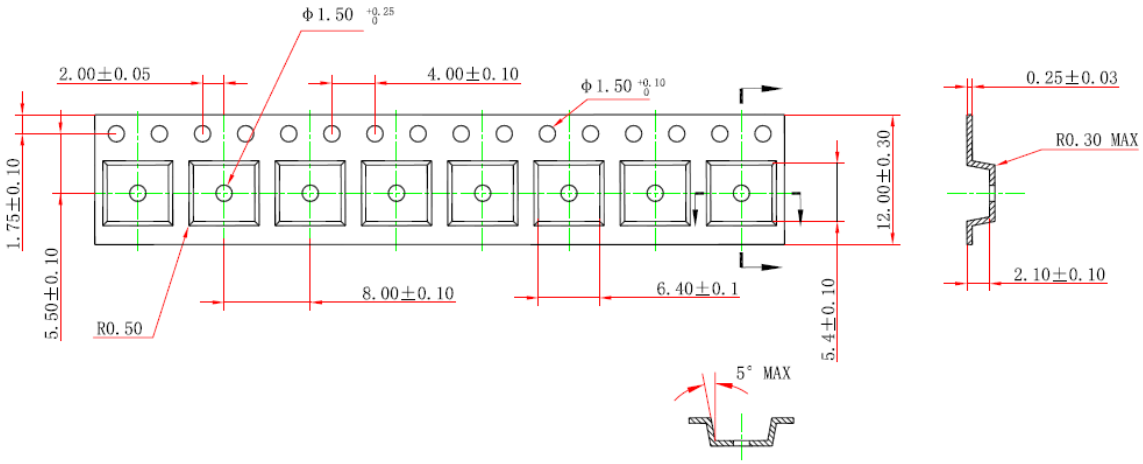

PN	DESCRIPTION	COMMENTS
SCT2320 **SCT2321**	3.8V-32V Vin, 2A Synchronous Step-down DCDC Converter with EMI Reduction	• 500KHz switching frequency • 3A Continuous output current • EMI reduction with switching node ringing-free. • Ultra-low quiescent current. High efficiency PFM at light load (SCT2320) • Frequency Spread Spectrum (SCT2320) • Fixed PWM mode for lower output ripple (SCT2321)

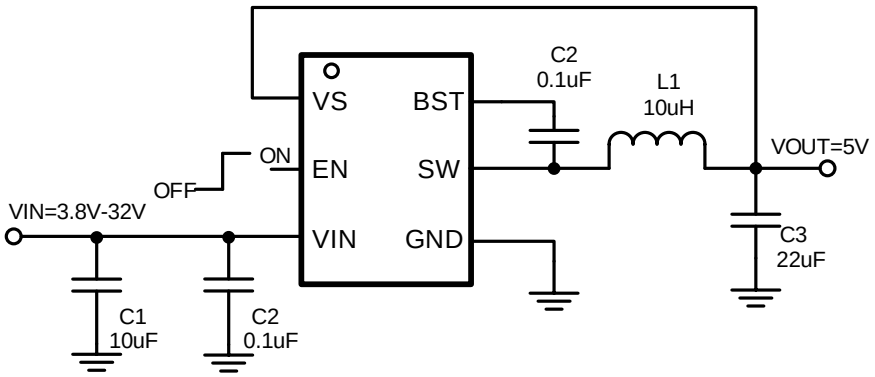

Figure 18. SCT2325 Ty Re

