# 4.5V-100V Vin, 0.6A, High Efficiency Synchronous Step-down DCDC Converter with Programmable Frequency

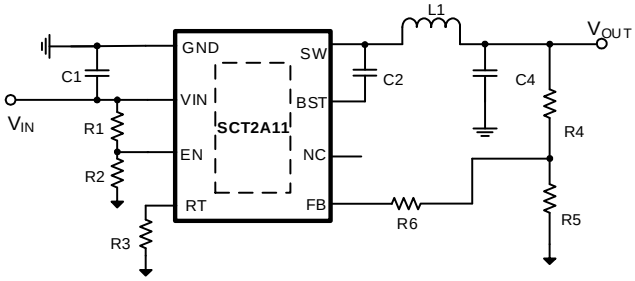


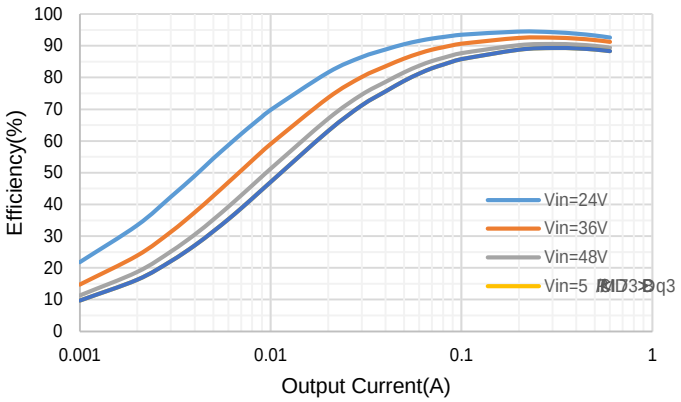


**Typical Application Efficiency, $V_{OUT}$=12V**

| | | |
|---|---|---|
| | | |

1

| | | |
|---|---|---|
| | | |
| | | |
| | | |

| | | | | |
|---|---|---|---|---|
| | | | | |
| | | | | |
| | | | | |

| | | | | |
|---|---|---|---|---|
| | | | | |
| | | | | |

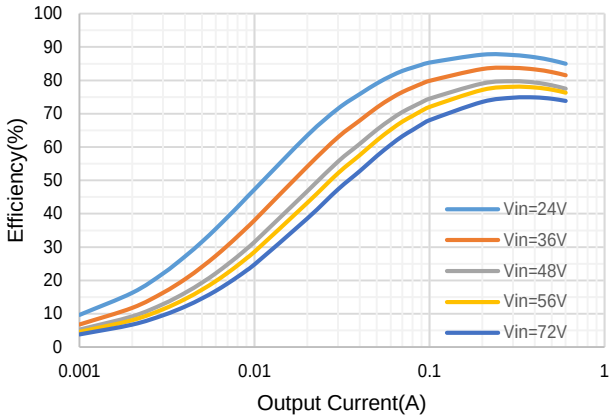
Efficiency(%)
100
90
80
70
60
50
40
30
20
10
0
0.001
0.01
0.1
1
Output Current(A)
Vin=24V
Vin=36V
Vin=48V
Vin=56V
Vin=72V

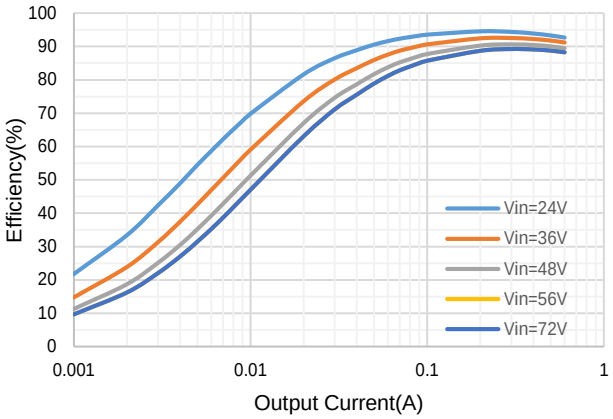
Efficiency(%)
100
90
80
70
60
50
40
30
20
10
0
0.001
0.01
0.1
1
Output Current(A)
Vin=24V
Vin=36V
Vin=48V
Vin=56V
Vin=72V

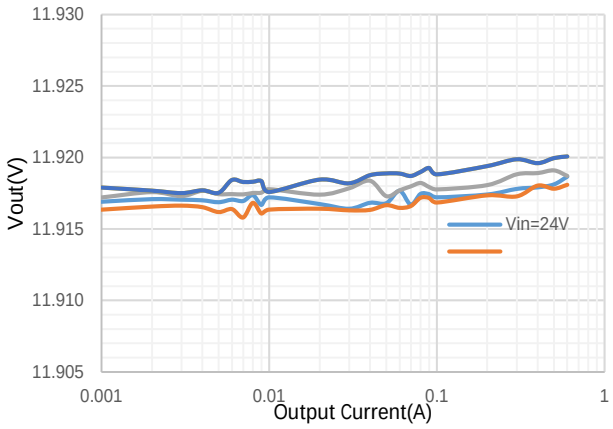
Vout(V)
11.930
11.925
11.920
11.915
11.910
11.905
0.001
0.01
0.1
1
Output Current(A)
Vin=24V

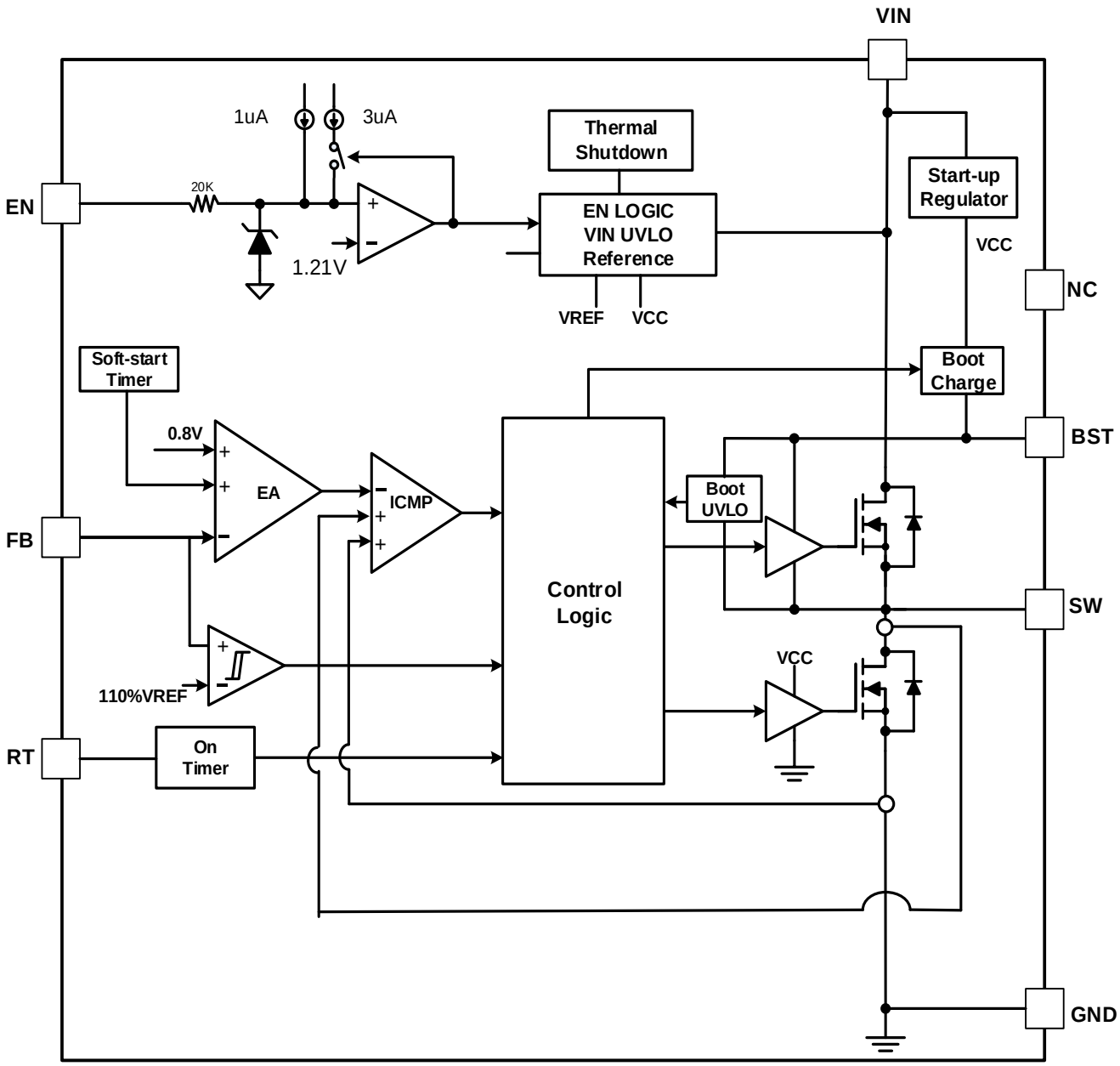
VIN
1uA
3uA
Thermal Shutdown
Start-up Regulator
EN
20K
EN LOGIC
VIN UVLO
Reference
VCC
1.21V
VREF
VCC
NC
Soft-start Timer
Boot Charge
0.8V
BST
EA
ICMP
Boot UVLO
FB
Control Logic
SW
VCC
110%VREF
RT
On Timer
GND

$$3 = \frac{(\text{——}) -}{{}_1(1 - \text{——}) + {}_2}$$

$$4 = \frac{{}_3 \times}{- \quad + {}_3({}_1 + {}_2)}$$

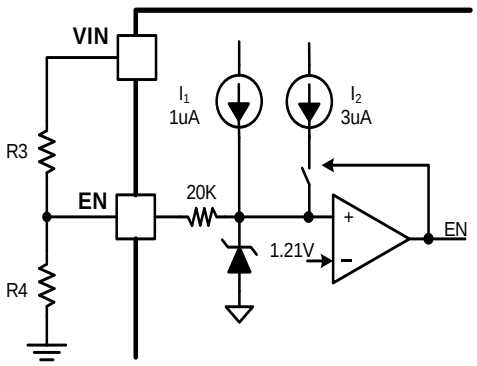


±1% tolerance

$$\text{-} \quad = (\text{——} - 1) \quad \text{-}$$

- 
- 

( ) = ( ) (4)

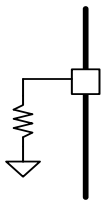

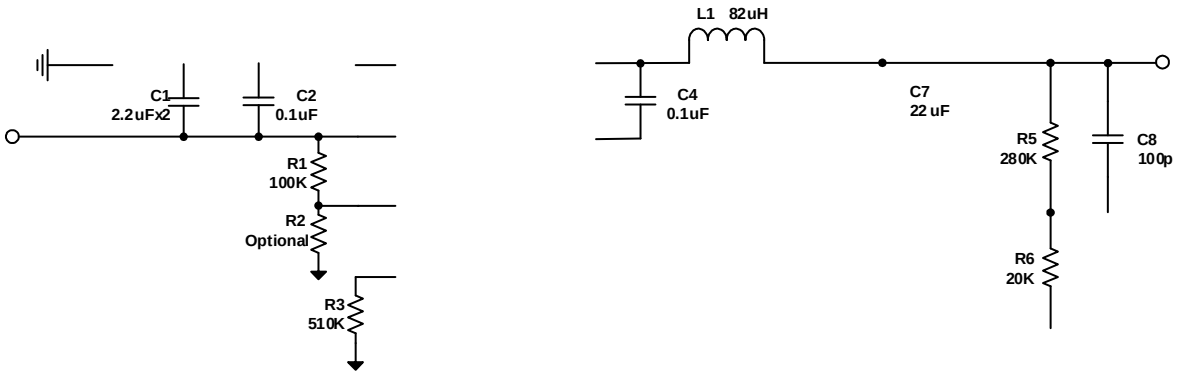
L1 82uH
C1
2.2uFx2
C2
0.1uF
C4
0.1uF
C7
22 uF
R1
100K
R2
Optional
R3
510K
R5
280K
C8
100p
R6
20K

| | |
|---|---|
| | |
| | |
| | |
| | |
| | |
| | |
| | |

- 
- 

$$= \frac{\qquad}{(\quad)} \left(1 - \frac{\qquad}{(\quad)}\right)$$

- 
- 
- 
- 
- 
- 

$$= \frac{\qquad + \frac{\qquad}{2}}{\qquad}$$

$$= \sqrt{(\quad)^2 + \frac{1}{12}(\quad)^2}$$

- 
- 
- 
- 

D O G W K H L O ™o ` ` X O D W H G D V LCGs 0 v.¿i–ñ VRe... Ü‡1€S € P P H p v.F p a@D . V € F L O G. L ð C

$$I_{CINRMS} = I_{OUT} \sqrt{\frac{V_{OUT}}{V_{IN}} (1 - \frac{V_{OUT}}{V_{IN}})}$$

$$I_{CINRMS} = 0.5 \quad I_{OUT}$$

$$\Delta V_{IN} = \frac{I_{OUT}}{f_{SW} \quad C_{IN}} \quad \frac{V_{OUT}}{V_{IN}} \quad (1 - \frac{V_{OUT}}{V_{IN}})$$

$$\Delta V_{OUT} = \frac{( \quad - \quad )}{8 \quad ^2}$$

- $V_{OUT}$
-
-
-
-
-

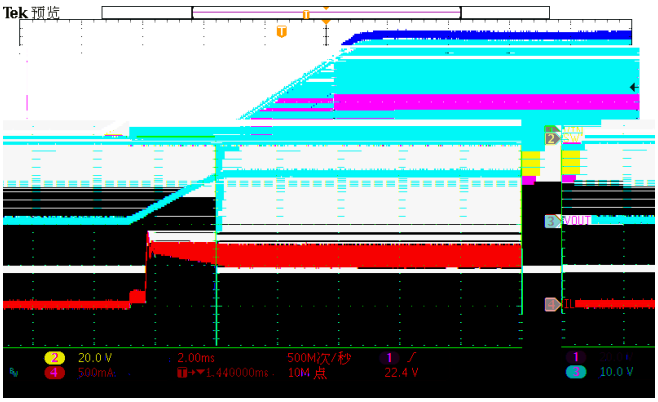
Tek 预览
SW
VOUT
IL
20.0 V
500mA
2.00ms
1.440000ms
500M次/秒
10M 点
22.4 V
10.0 V

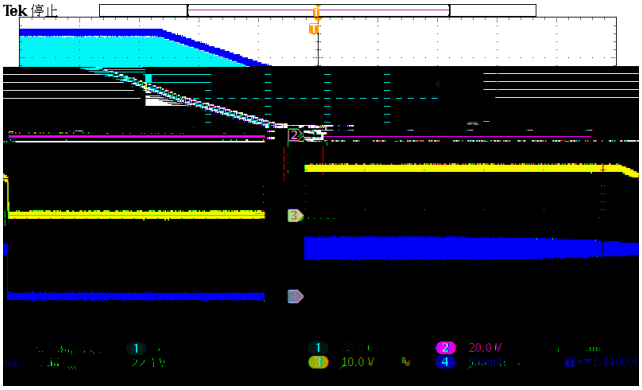
Tek 停止
SW
VOUT
IL
20.0 V
500mA
10.0 V

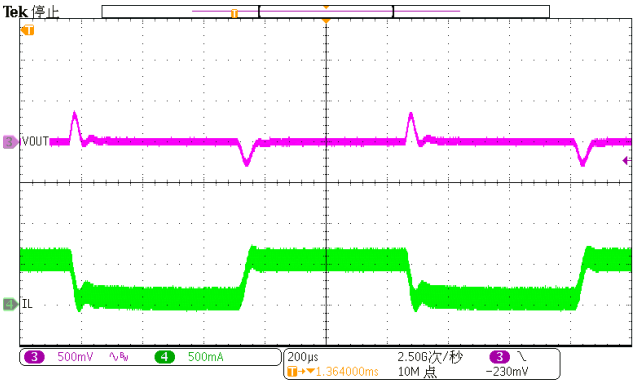
Tek 停止
VOUT
IL
500mV
500mA
200µs
1.364000ms
2.50G次/秒
10M 点
−230mV

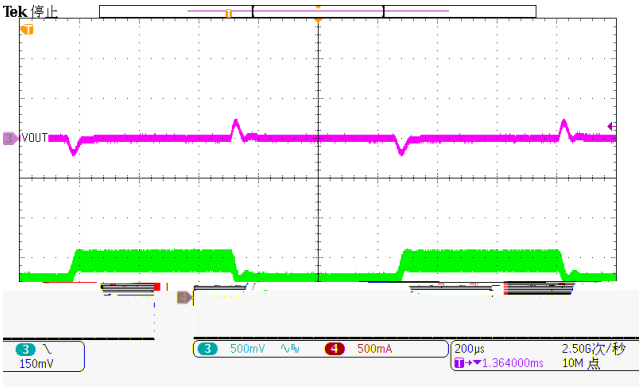
Tek 停止
VOUT
150mV
500mV
500mA
200µs
1.364000ms
2.50G次/秒
10M 点

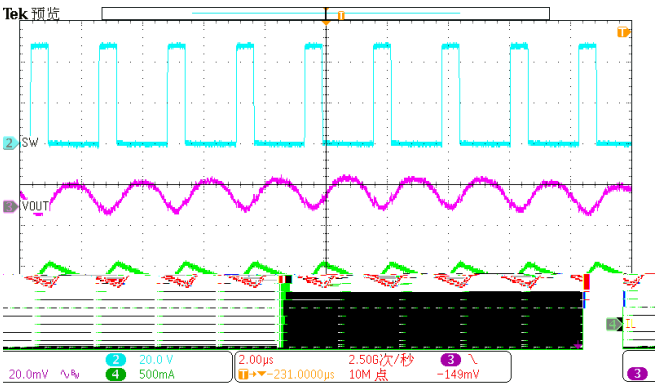
Tek 预览
SW
VOUT
20.0mV
20.0 V
500mA
2.00µs
−231.0000µs
2.50G次/秒
10M 点
−149mV

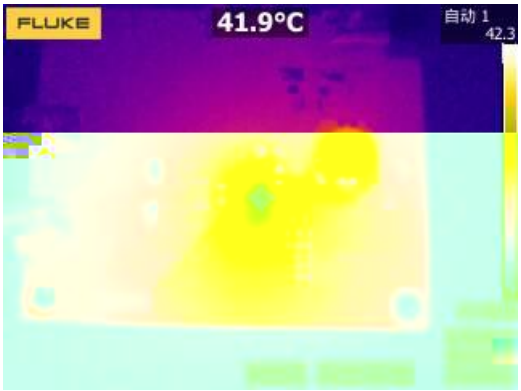
FLUKE
41.9°C
自动 1
42.3

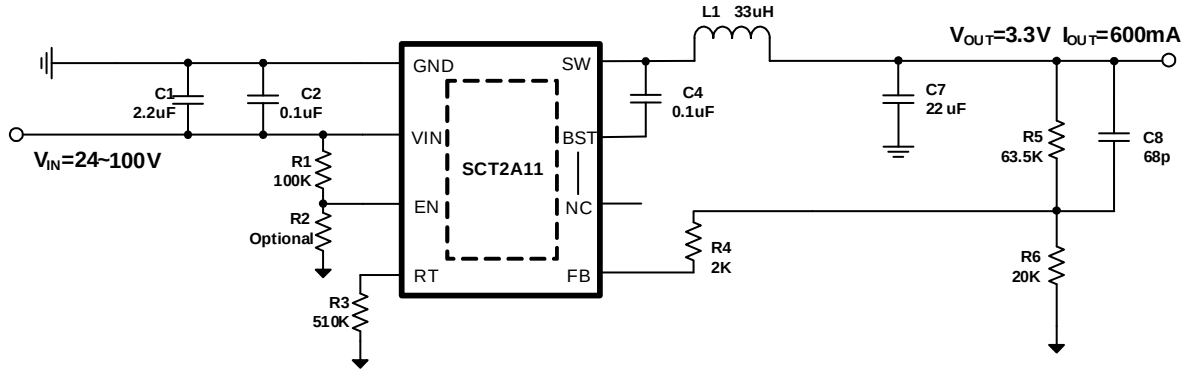
L1 33uH
$V_{OUT}$=3.3V $I_{OUT}$=600mA
GND
SW
C1
2.2uF
C2
0.1uF
VIN
BST
C4
0.1uF
C7
22 uF
R5
63.5K
C8
68p
$V_{IN}$=24~100V
SCT2A11
R1
100K
EN
NC
R2
Optional
R4
2K
R6
20K
RT
FB
R3
510K

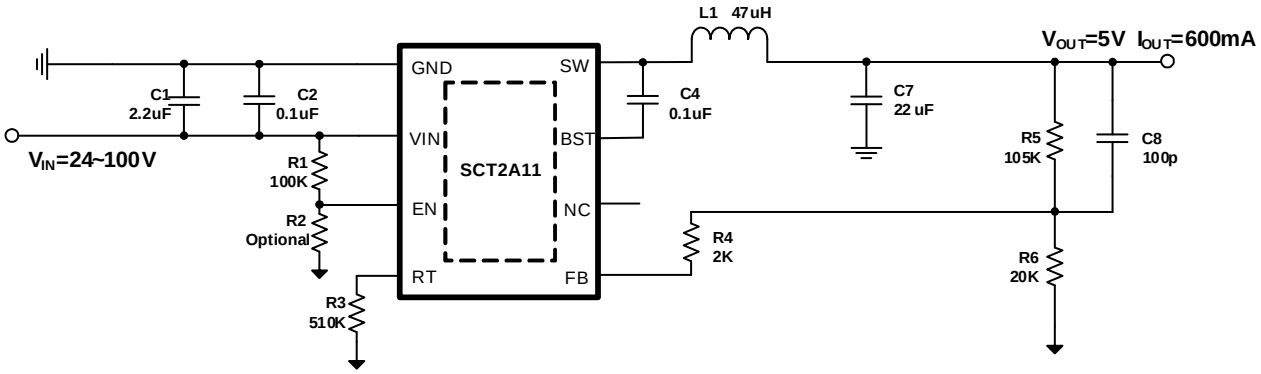
L1 47uH
$V_{OUT}$=5V $I_{OUT}$=600mA
GND
SW
C1
2.2uF
C2
0.1uF
VIN
BST
C4
0.1uF
C7
22 uF
R5
105K
C8
100p
$V_{IN}$=24~100V
SCT2A11
R1
100K
EN
NC
R2
Optional
R4
2K
R6
20K
RT
FB
R3
510K

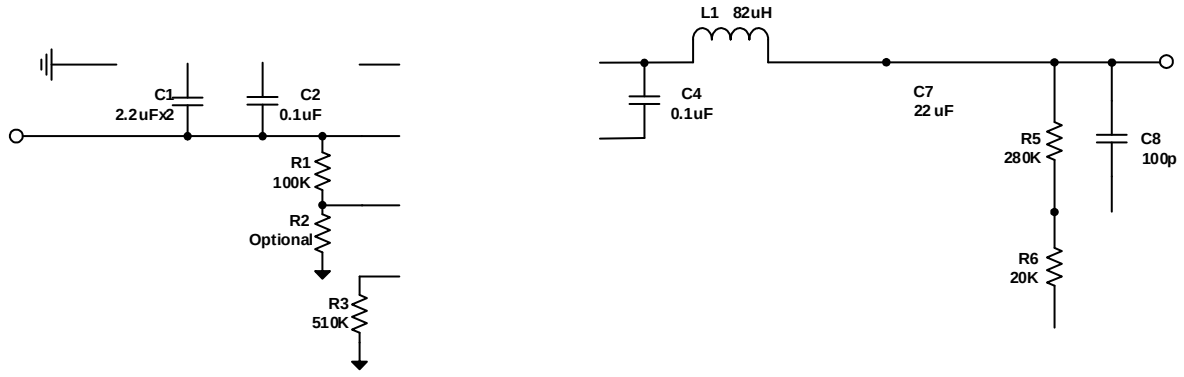
L1 82uH
C1
2.2uFx2
C2
0.1uF
C4
0.1uF
C7
22 uF
R5
280K
C8
100p
R1
100K
R2
Optional
R6
20K
R3
510K

1.

2.
3.

4.

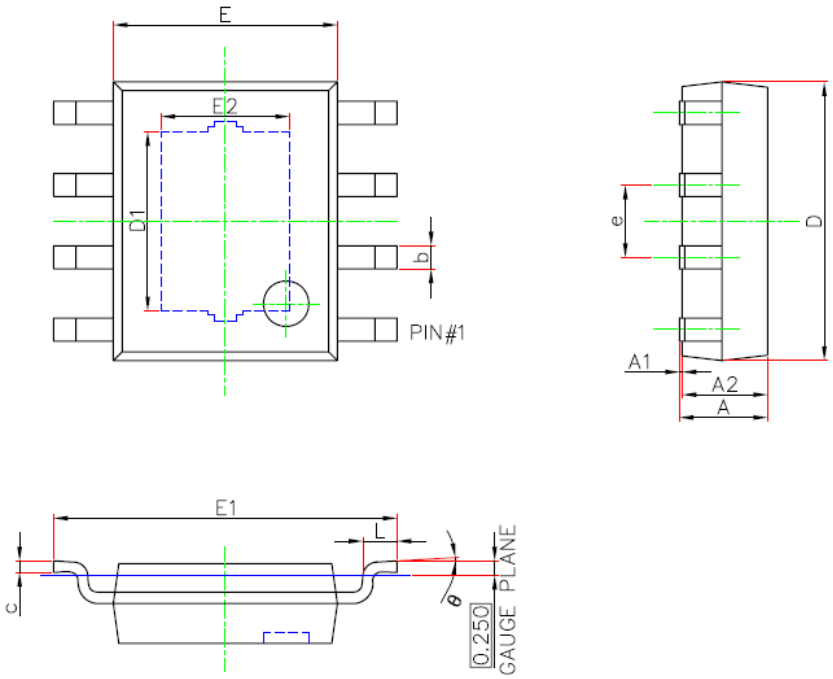


| | | | | |
|---|---|---|---|---|
| | | | | |
| | | | | |
| | | | | |
| | | | | |
| | | | | |
| | | | | |
| | | | | |
| | | | | |
| | | | | |
| | | | | |
| | | | | |
| | | | | |
| | | | | |
| | | | | |
| | | | | |
| θ | | | | |

1.
2.
3.
4.
5.
6.

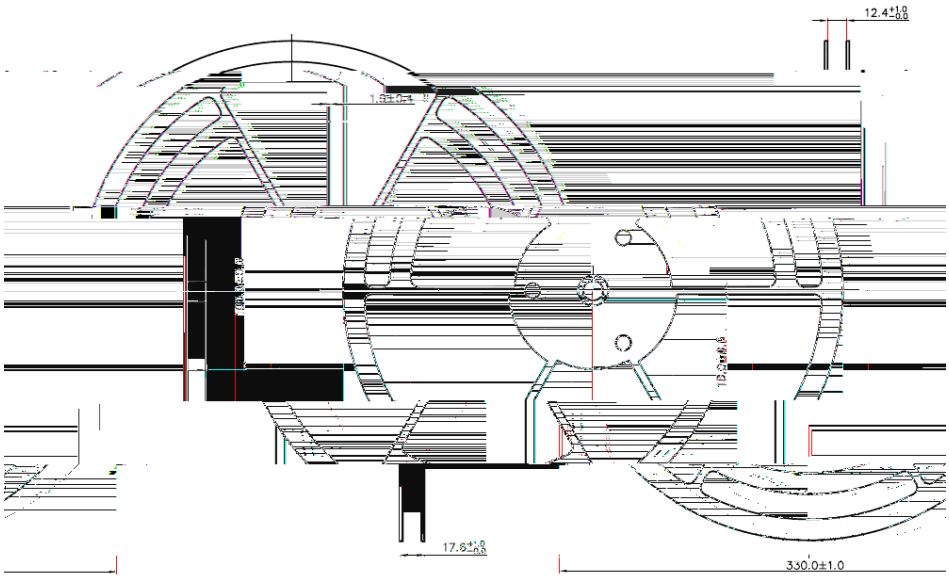
12.4+1.0 -0.0
17.6+1.0 -0.0
330.0±1.0

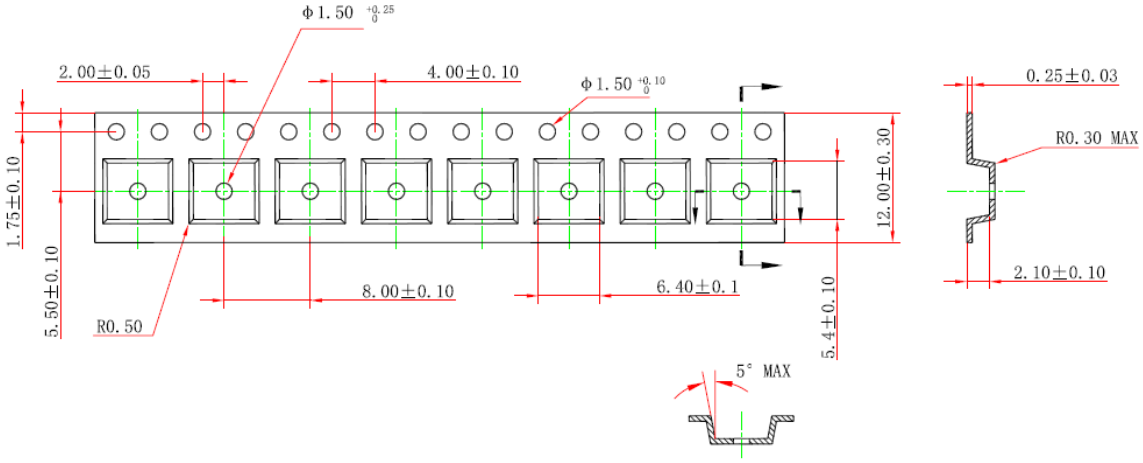
Φ1.50 +0.25 0
2.00±0.05
4.00±0.10
Φ1.50 +0.10 0
1.75±0.10
5.50±0.10
R0.50
8.00±0.10
6.40±0.1
12.00±0.30
5.4±0.10
5° MAX
0.25±0.03
R0.30 MAX
2.10±0.10